MANULET
Easy Tube

Intended use - Turning

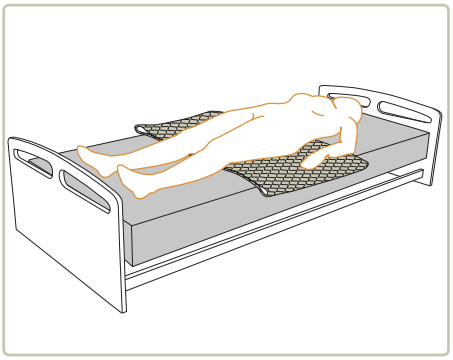
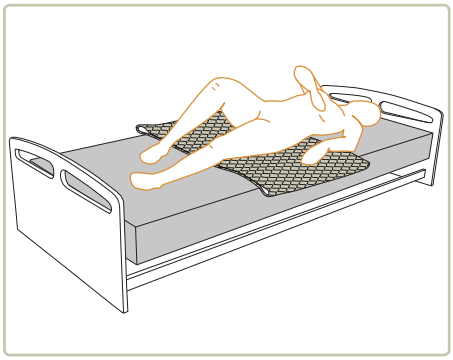
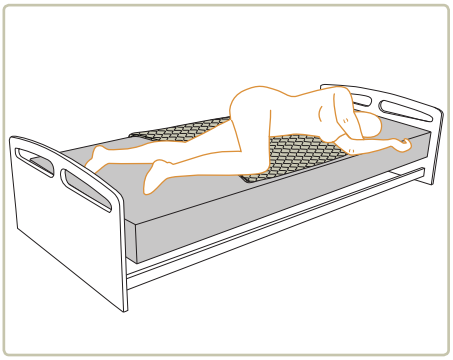

Intended use - Moving upwards

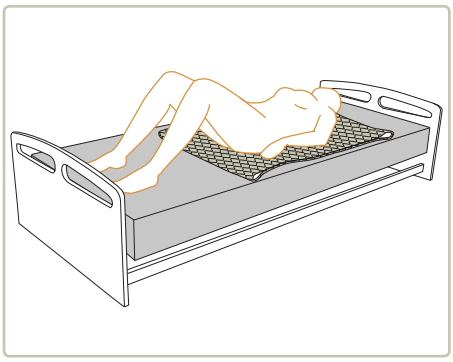
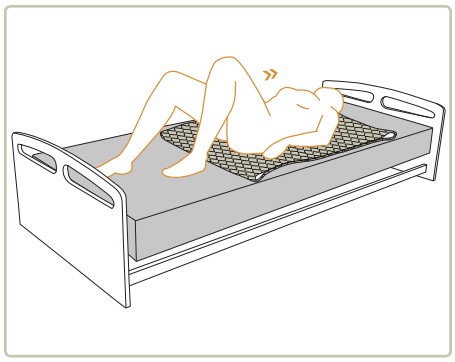
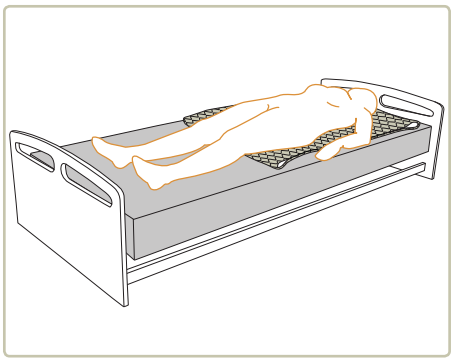

Mounting

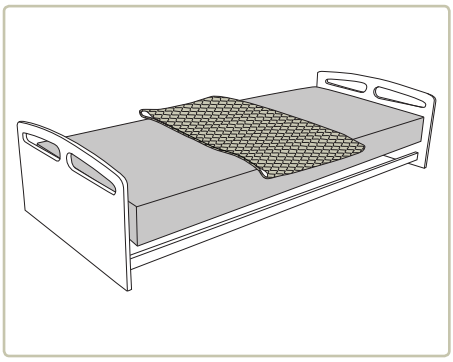

or

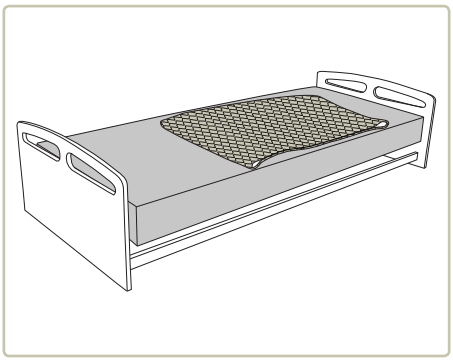

Vendlet ApS
Egelund 33
DK-6200 Aabenraa
www.vendlet.com

VENDLET
VALUE IN CARING